INSTALLATION AND USER MANUAL

ECOFLEX

EF02

EF04

www.climer.es

1. INTRODUCTION 1
2. GENERAL INDICATIONS 1
3. TECHNICAL INFORMATION 3
4. INSTALLATION STEPS 5
5. PLACING ECOFLEX 6
6. AIR CONNECTION 7
7. HIDRAULIC CONNECTION 8
8. ELECTRICAL CONNECTION 11
9. COMISSIONING. CONTROLLER 12
10. WARRANTY CONDITIONS 22

1. INTRODUCTION

Thank you for buying a product manufactured by CLIMER TECHNOLOGY. This product, has been manufactured according to the European Quality Standards, incorporates prime grade materials and its correct working has been tested before it leaves our facilities.

Through this Installation and User Manual, you will be guide towards the correct and safety installation of the product. It is necessary to carefully read this manual before making any handling to avoid problems arising from the misuse of the product.

The company CLIMER TECHNOLOGY reserves the right to modify the information included in this document at any time without prior notice.

2. GENERAL INDICATIONS

2.1. Safety notes

The incorrect or inappropriate use of this product could lead to hazardous situations, causing damage or injuries to the user, third parties or even to the product itself or material goods.

- The installer has the responsibility to install the minimum safety devices (hydraulic and electrical) set out in this Manual. In case of failure, the lack of any device may cause burns or other injuries.
- The installer has the responsibility to inform the user about the function and placement of the safety devices installed into the device and the installation.
- The water outlet temperature could reach 62 degrees. Do not touch the pipes while the system is working to avoid any risk of burns.

2.2. Qualification of the installer

It is needed the technical staff have the official certification that accredits them as authorized to handle coolants.

The installer must explain the user the application of the product and the use and management of the unit, and he should provide the user all the documentation supplied with the equipment.

2.3. Package contents

The ECOFLEX system comprises the following components:

- ECOFLEX
- Silent-blocks
- User Manual

2.4. Indications about transport and unpacking the unit

The unit is supplied packed into a wooden pallet properly secured to prevent damage during transport.

The material that CLIMER TECHNOLOGY uses to the packing are recyclables, so dispose it in an appropriate container.

Use a forklift or hand pallet truck to transport the unit to the installation site, always introducing the forks into the bottom of the pallet being careful not to damage the unit.

In case you identify any damage at the time of the reception of the unit, it is mandatory to register it in the reception note of the transport company, and then, submit the complaint.

For this reason, it is recommended to make a thorough visual inspection of the goods before signing the reception note.

3. TECHNICAL INFORMATION

3.1. Operating Principle

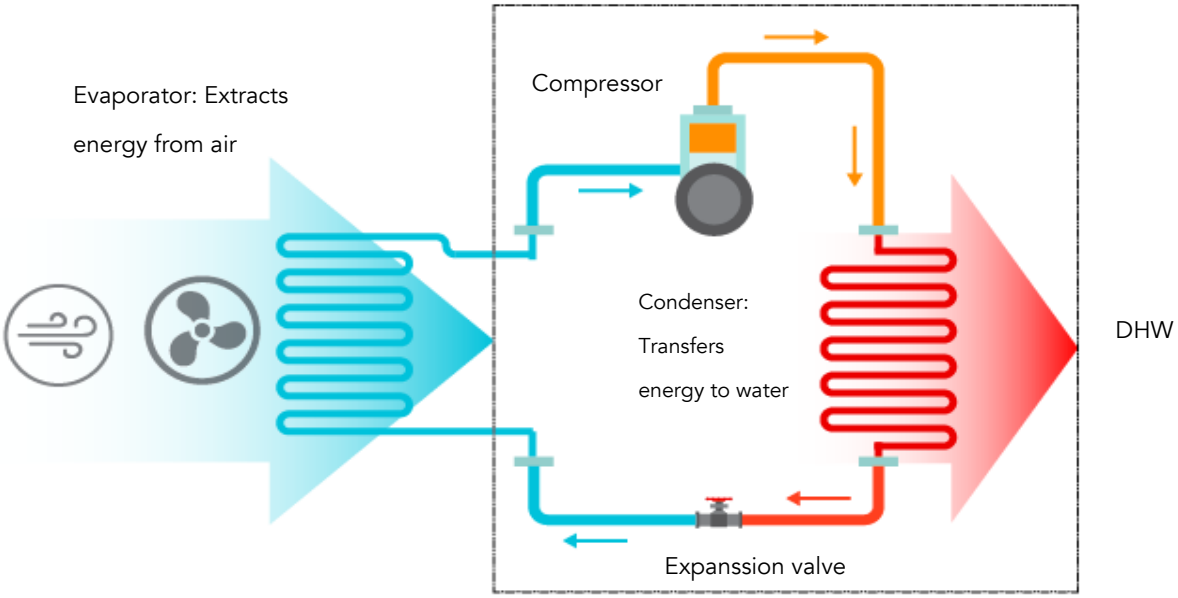

Figure 1. Operating principle

3.2. Dimension drawings

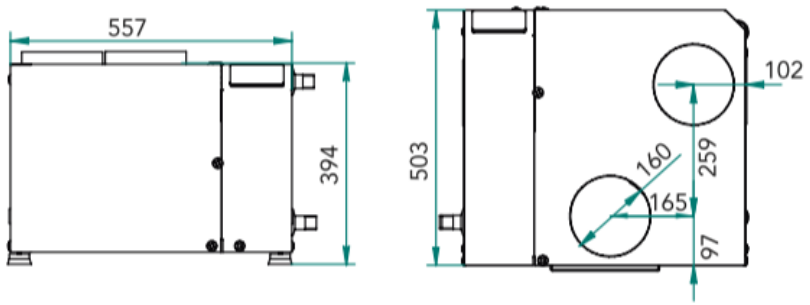

Figure 2. Dimensions EF02

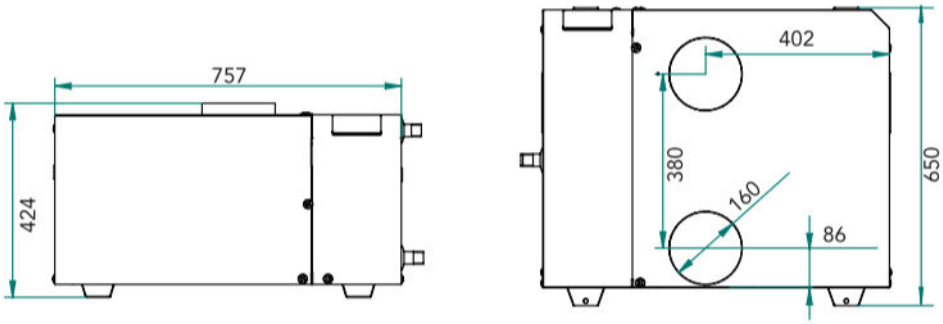

Figure 3. Dimensions EF04

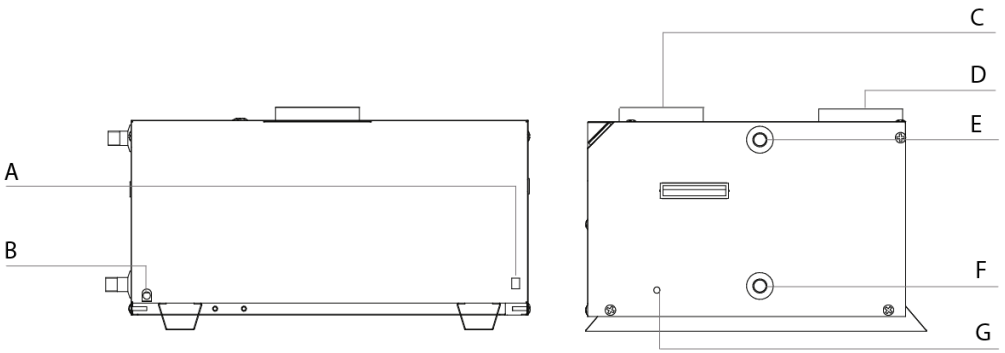

Figure 4. Front and back connections

A	Power supply, 230 V/1PH/50 Hz
B	Condensate drain
C	Air intake
D	Air outlet
E	Hot water outlet, (EF02: 3/4”/ EF04: 1”)
F	Cold water inlet, (EF02: 3/4”/ EF04: 1”)
G	Temperature probe / Pump connection

3.3. Technical data

Model	EF02	EF04
Energy efficiency class	A	A
Load profile	L	XL
Heating capacity range, W	1841 – 1127	3680 – 2270
Input power range, W	496 – 407	990 – 806
SCOP (14 °C)	2,91	3,01
Minimum air temperature, °C	-5	
Maximum water temperature, °C	55	
Refrigerant	R134a	
Charge, g	950	1200
Power supply, V/ph/Hz	230 / 1 / 50	
Air flow, m^3/h	350	700
Maximum pressure drop (air), Pa	70	
Air connection, mm	160	
Mimimum water flow, L/h	250	485
Pressure drop heat exchanger, kPa	5	8
Water connection, inch	3/4	1

4. INSTALLATION STEPS

Before starting the installation, check the availability of all the necessary components and tools:

- Drill
- Screwdriver
- Hydraulic installation components
- Electric installation components

Once it has been checked that it is available all the necessary components and tools, the installer should follow the next steps:

1. Placing the ECOFLEX
2. Air connection
3. Hydraulic installation
4. Electric installation
5. Commissioning

5. PLACING ECOFLEX

The place where the system will be installed should allow an easy access to make maintenance work or inspection.

Beside these factors, it is important to consider the following indications regards the installation site:

- The system has been designed and manufactured for it indoors utilization.
- In case the system has to be placed outdoors, it must be protected against the adverse weather conditions (direct solar radiation, rain, snow…)
- Try to place ECOFLEX as near as possible of the buffer tank.
- Installer must install the supplied Silent blocks to avoid the transmission of vibration.

The equipment allows the installation on floor or on wall. To do this, it has 4 holes to insert the legs (supplied) or the supports to the brackets.

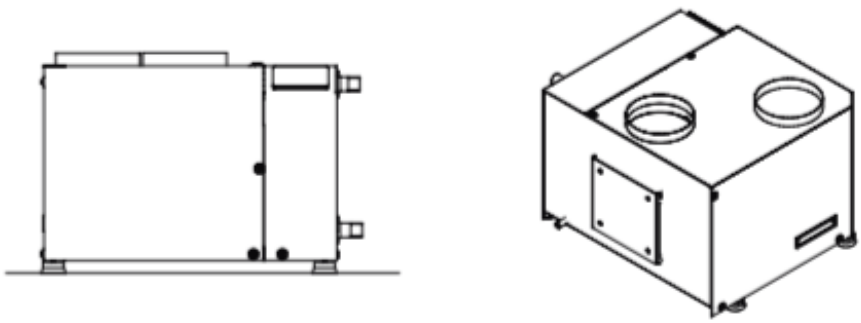

Figure 5. EF02 supports

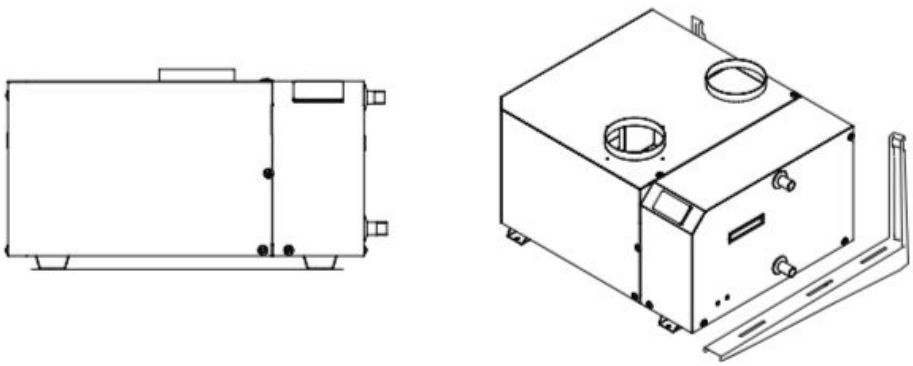

Figure 6. EF04 supports

If the equipment is to be installed in the wall, be aware that a minimum distance between the water outlet of the tank and the outlet of ECOFLEX must be observed to ensure a good functioning of the pump and the equipment.

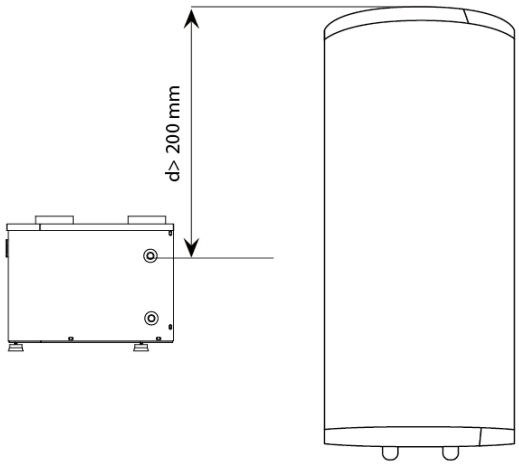

Figure 7. Minimum distance from ECOFLEX to the water outlet of the buffer tank.

6. AIR CONNECTION

ECOFLEX unit has two air connections located at the top cover of the system.

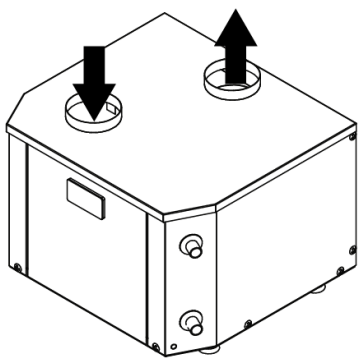

Figure 8. Outlet/intake air

Since the temperature of the exhaust air is lower than the intake air flow, the user can recover this cold air to refresh a room. In this case, it is recommended to install a double duct, one to the room and other to outdoors. Using a gate, the user can stop the air flow conducting it to outdoors when cooling isn't needed.

IMPORTANT:

- Do not use flexible duct! Only smooth PVC pipe is allowed.
- Do not use anti-insect grid.

When the inlet and outlet ducting is needed, use only rigid smooth PVC tube.

The pressure drop in the whole air circuit (pipes and accessories) must be lower than the static pressure of the system, 70 Pa.

In the following table is shown the allowed total pipe length (intake + exhaust). The equivalent length of any accessory installed in the circuit must be subtract to the maximum allowed pipe length:

Maximum length (PVC rigid pipe) 160 mm	14 m
Elbow 90° PVC 160 mm	3 equivalent meters
External grid	3 equivalent meters

7. HIDRAULIC CONNECTION

The hydraulic connection depends on the existing buffer tank, if some type of connection for the recirculation or coil is available.

The possible connections are detailed as follows:

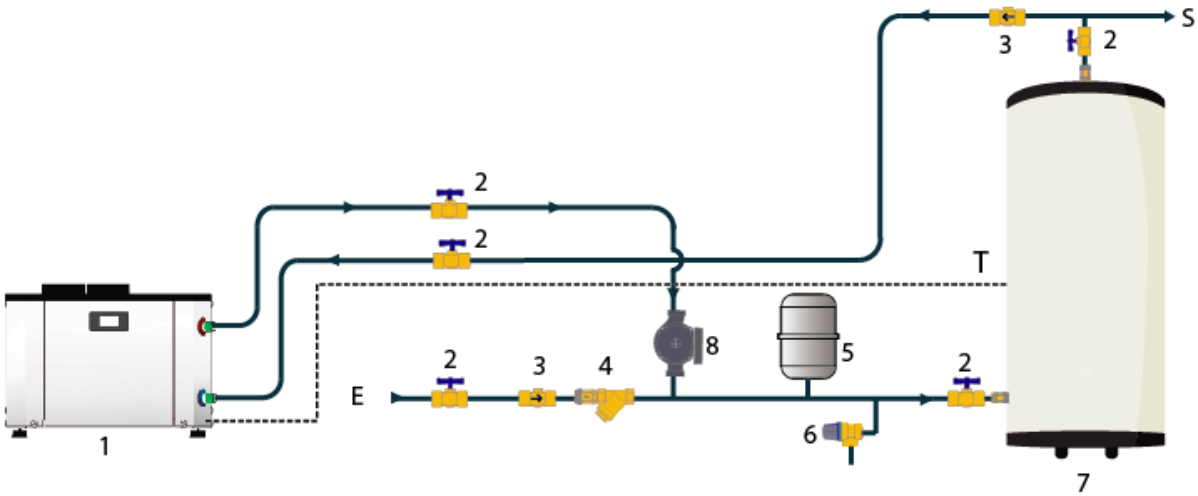

Figure 9. ECOFLEX connection on storage tank with two outlets

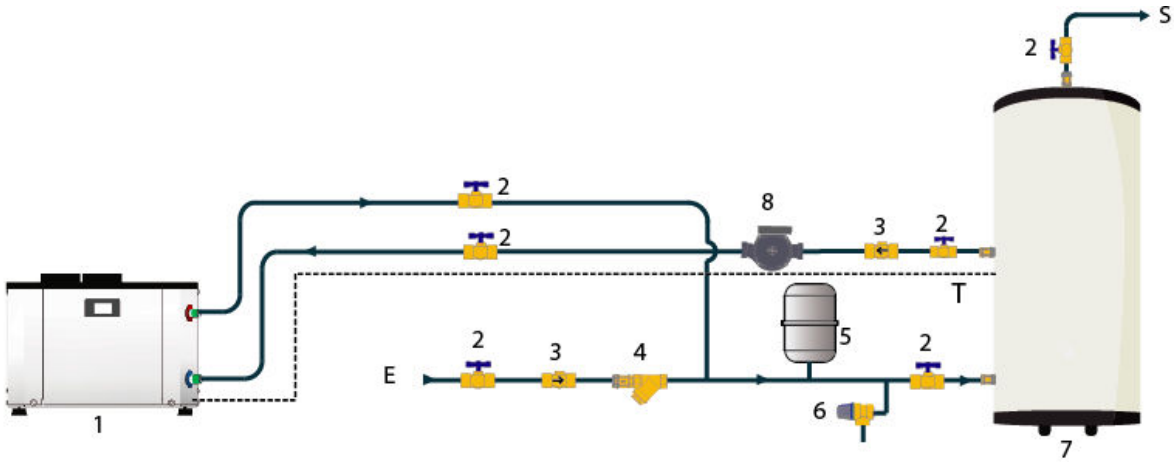

Figure 10. ECOFLEX connection on storage tank with a recirculation outlet

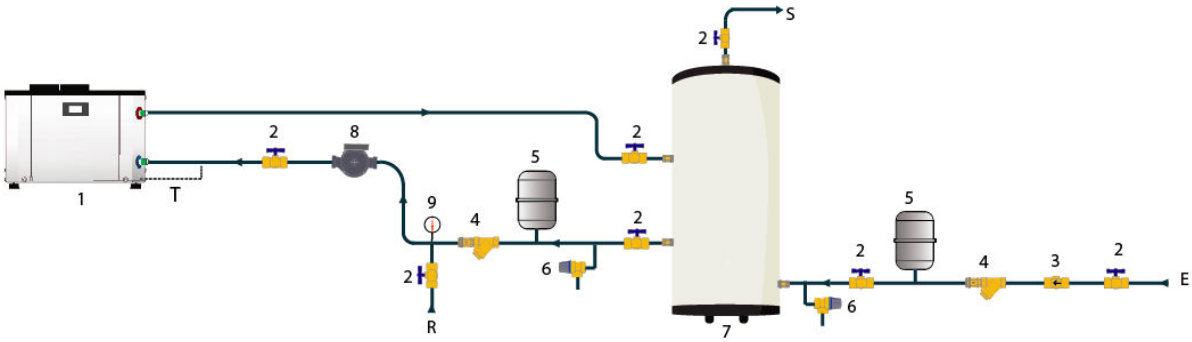

Figure 11. ECOFLEX connection, buffer tank with inner coil.

The installer must install the following components of the hydraulic circuit:

- ECOFLEX (1)
- Gate valve (2)
- Check Valve (3)
- Inclined filter (4)
- Expansion vessel (5)
- Safety valve (6)
- Storage tank (7)
- Pump (8)
- Pressure gauge (9)
- Red water inlet (E)
- DHW output (S)
- Inlet water filled coil (R)
- Probe connection (T)

Once the hydraulic connections are made, purge the circuit to remove the air from the installation.

In addition, it is necessary to install electrolytic sleeves in the water connections to prevent galvanic corrosion in the pipes.

IMPORTANT:

- The water pipes must be at least 22 mm in diameter to avoid excessive losses in the circuit
- If the unit is to be installed on the wall, its height must not exceed half the storage tank.

7.1. Pump connection

For the choice of the pump, it is necessary to consider the pressure drop of the installed pipe as well as the accessories (elbows, filters, valves ...). The following table shows the flow rate to be circulated by the equipment and the pressure drop of the installed heat exchanger:

	Minimum flow, L/h	Pressure drop, kPa
EF02	250	5
EF04	485	8

7.2. Temperature probe connection

The equipment incorporates connected temperature probe. The installer must pass through the indicated opening (Figure 4, G) and connect it to the buffer tank. The position of the probe varies according to the type of buffer tank.

Follow the instructions in of the diagrams shown in Figures 9, 10 and 11.

8. ELECTRICAL CONNECTION

The power supply of the system is 230 V/1/50 Hz.

PV: Photovoltaic connection

LPS: Low pressure switch

HPS: High pressure switch

NTC1: Water temperature probe

NTC2: Ambient temperature probe

D: Display

VS: Solenoid valve

R: Electrical heater

K: Compressor (no relay in EF02)

F: Fan

230 VAC: Power supply

P: Pump

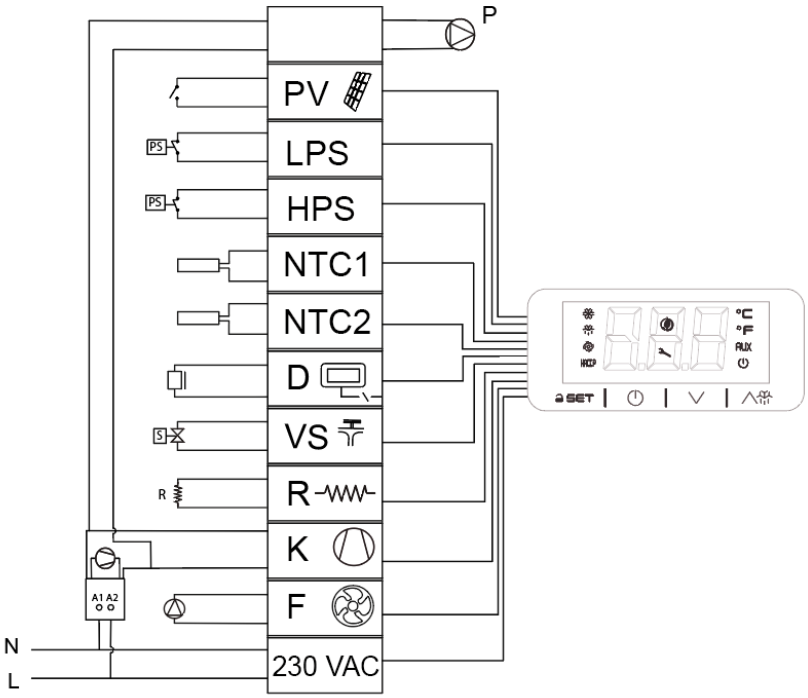

8.1. Pump

The installer must connect the electrical connection of the pump to the terminal block inside the ECOFLEX unit, as shown in the diagram above.

IMPORTANT: It is only permitted to connect a pump with a power supply of 230 V /1 ph/ 50 Hz and 3 A maximum current.

8.2. Electrical heater

It is possible to control the operation of an electrical heater installed inside the tank. To do this, the installer must connect the power supply to the controller through the terminals R.

IMPORTANT: It is only allowed to connect an electrical heater of 230 V/ 1ph /50 Hz and 1500 W maximum power.

9. COMISSIONING. CONTROLLER.

9.1. User interface description

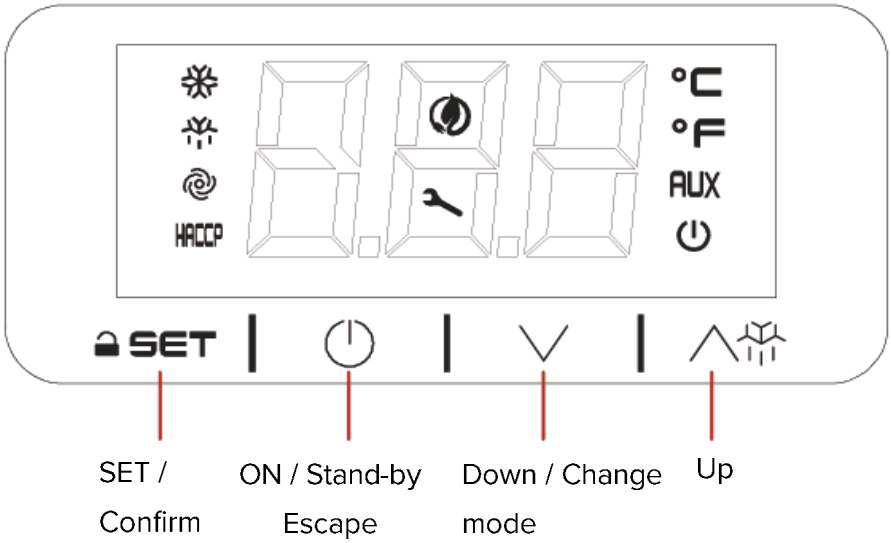

Symbol	Meaning when it lights
	Compressor switched on
	Defrost active
	Fan switched on
HACCP	Alarm active
	Compressor working hours exceeded
°C	Unit in °C
°F	Unit in °F
AUX	Electric heater switched on
	Stand by

9.2. INSTALLATION - Switching on

After full installation of the water heater (power and water pipes connected) and after the water heater tank is full of water, power can be turn ON.

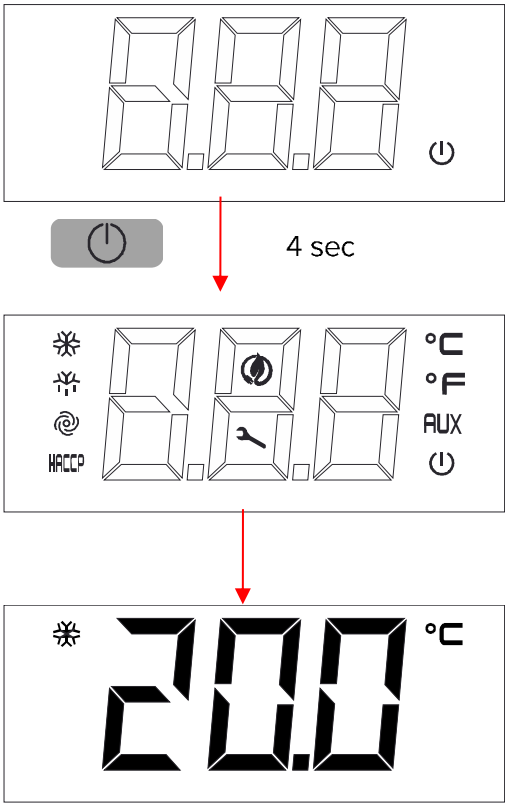

1. After filling the tank of water, connect the mains plug to the mains supply. The screen will show the symbol.

2. Hold the key for 4 seconds. The display will show the icons.

3. The screen will show the water temperature.

9.3. Switching OFF

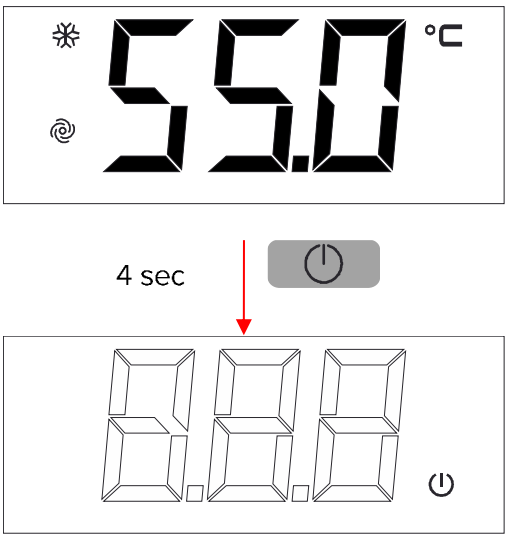

To switch off the system, hold the key for 4 seconds.

9.4. Unlocking the keypad

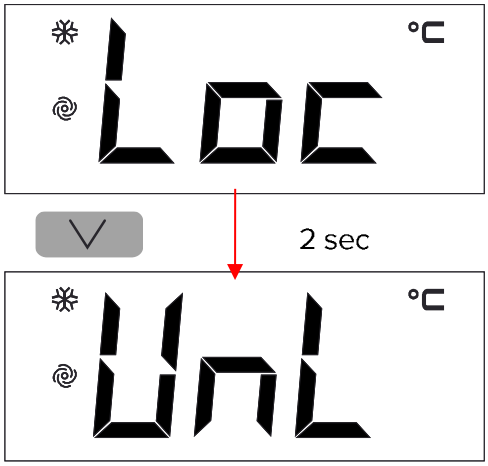

When 30 have elapsed without the keys being pressed, the display will show the '' LOC'' label and the keypad will lock automatically.

Touch any key until the screen shows **UnL**, to unlock the keypad.

9.5. Displaying the operating mode

At first initial power ON, the product goes, by default, in Eco mode. By touching one time the key, the controller will show the mode in operation in this moment.

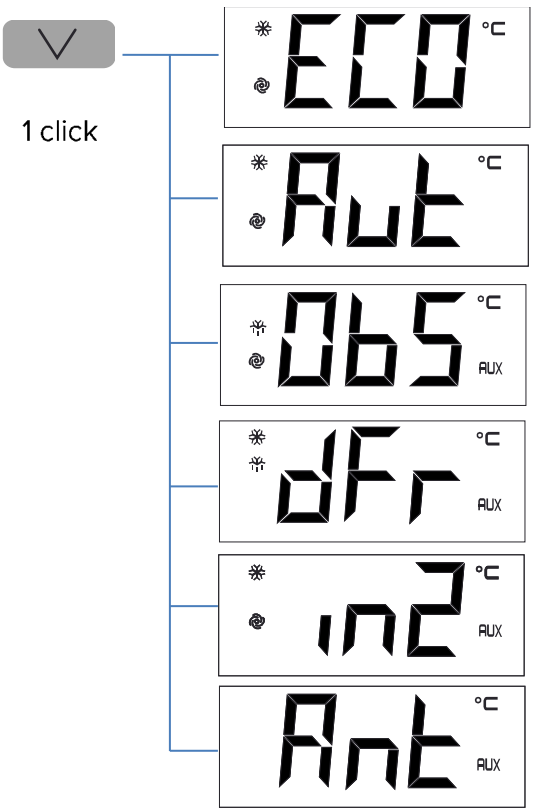

ECO Mode: Heating only by heat pump technology

Auto Mode: Heating by heat pump and electric heater only if the water temperature falls drastically

OverBoost Mode: Simultaneously heating by heat pump and electrical heater to achieve the temperature setpoint

Defrost: Defrost cycle active

Photovoltaics/ Timer: Automatic working due to the existence of surplus energy from PV installation or Off-Peak Rate

Antilegionella: Automatic disinfection by thermal shock

9.6. Changing operating mode

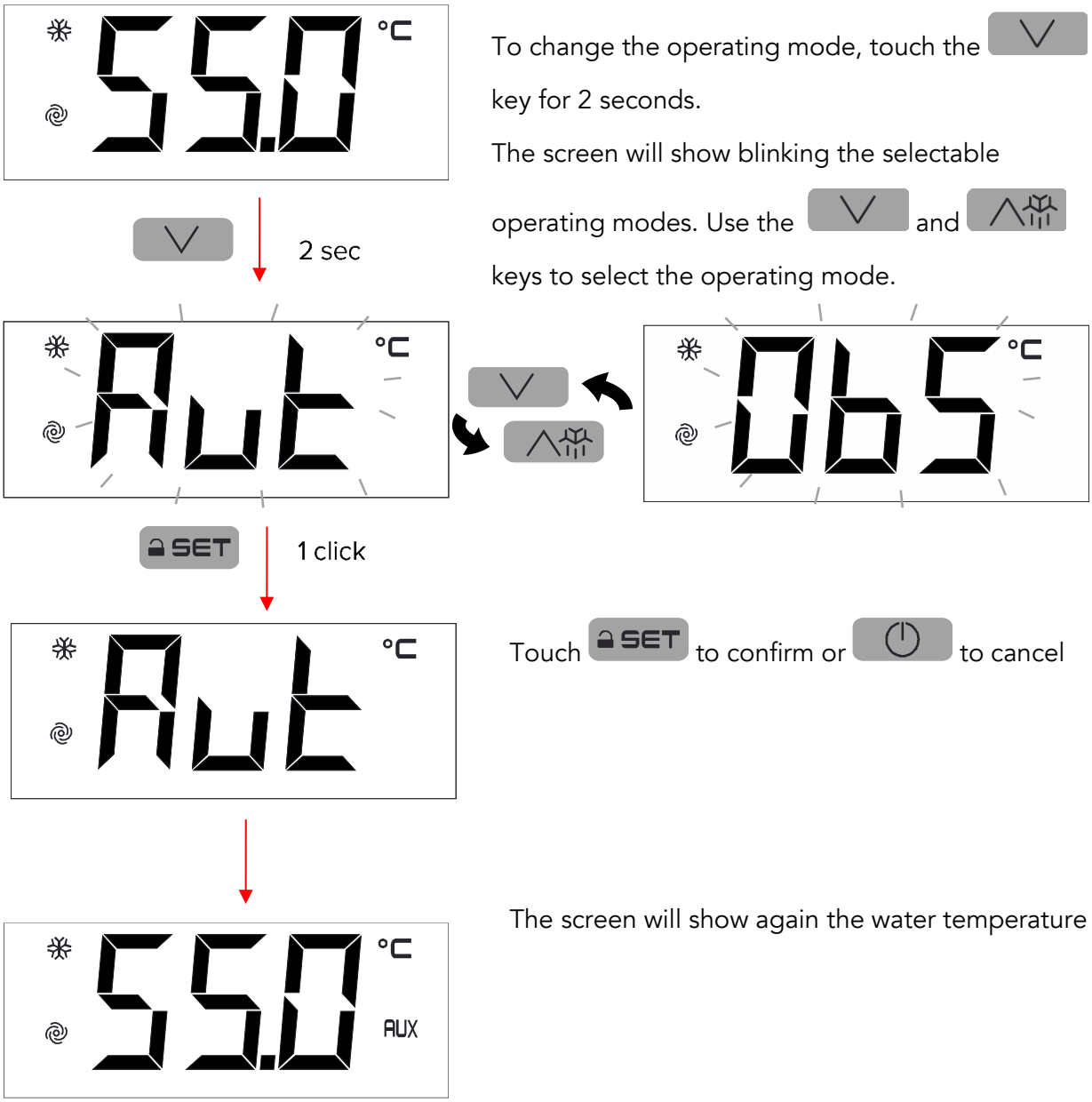

To change the operating mode, touch the key for 2 seconds.

The screen will show blinking the selectable operating modes. Use the and keys to select the operating mode.

Touch SET to confirm or to cancel

The screen will show again the water temperature

9.7. ECO Mode

ECO mode: Maximum savings. The system heats water only by heat pump technology.

This is the factory default mode.

Setting the ECO temperature setpoint

The water temperature set point in ECO mode can be changed with the SP1 parameter.

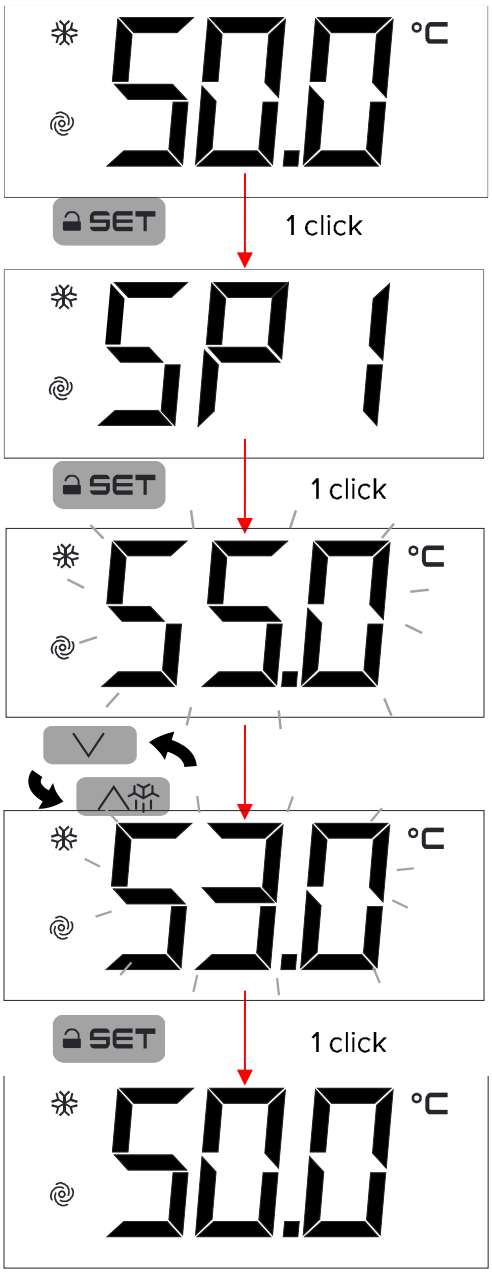

Touch SET key and select SP1. Touch SET to confirm.

The display will show the programmed temperature.

Touch ∨ or ∧ to select the desired temperature.

Touch SET to confirm or ⏻ to cancel.

9.8. AUTO Mode (ONLY IN COMBINATION WITH ELECTRICAL HEATER)

It maintains a steady temperature by the heat pump and only use the electrical heater if the temperature falls drastically.

Setting the AUTO temperature setpoint

The water temperature set point in AUTO mode can be changed with the **SP2** parameter.

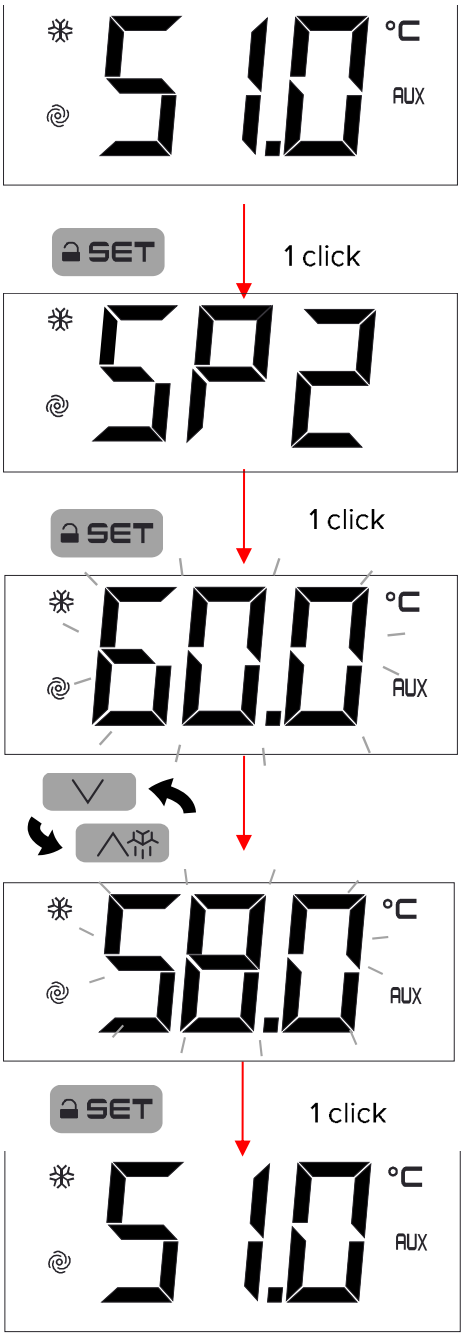

Touch SET key and select SP2. Touch SET to confirm.

The display will show the programmed temperature.

Touch ∨ or ∧ to select the desired temperature.

Touch SET to confirm or ⏻ to cancel.

This mode only works properly if the installer connects the electrical heater to be controlled by the Ecoflex.

9.9. OVERBOOST Mode (ONLY IN COMBINATION WITH ELECTRICAL HEATER)

Select this mode to achieve a fast heating by using simultaneously heat pump and electric heater.

This mode Works as a rapid heating. Once the setpoint temperature is reached, the system returns to the initial mode.

- If Overboost mode is switched on when the system Works from **ECO mode**: The system heats the water up to **SP1**, and then returns to ECO again
- If Overboost mode is switched on when the system Works from **Auto mode**: The system heats the water up to **SP2**, and then returns to Auto again

When Overboost mode is active, the display automatically changes showing the water temperature and **Obs**:

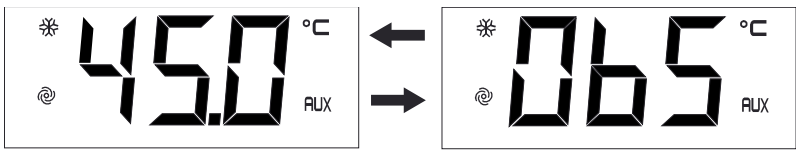

Cancelling the Overboost Mode

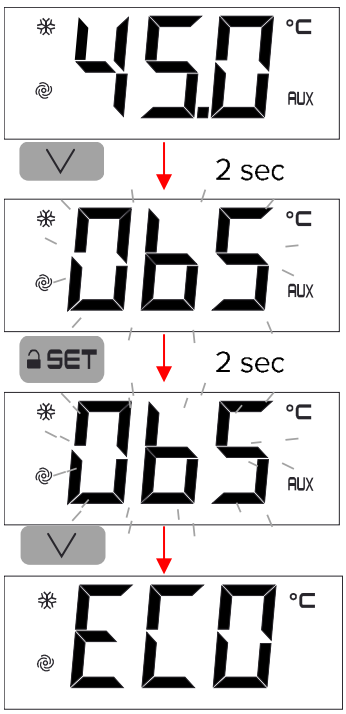

Touch ∨ for 2 seconds, **Obs** will blink on the screen

Touch SET for 2 seconds again, **Obs** will blink faster

Touch ∨ and the mode will be changed for the initial mode.

Parameter SP3 allows to set the minimum temperature that Overboost can be actived.

To change it value, follow the procedure:

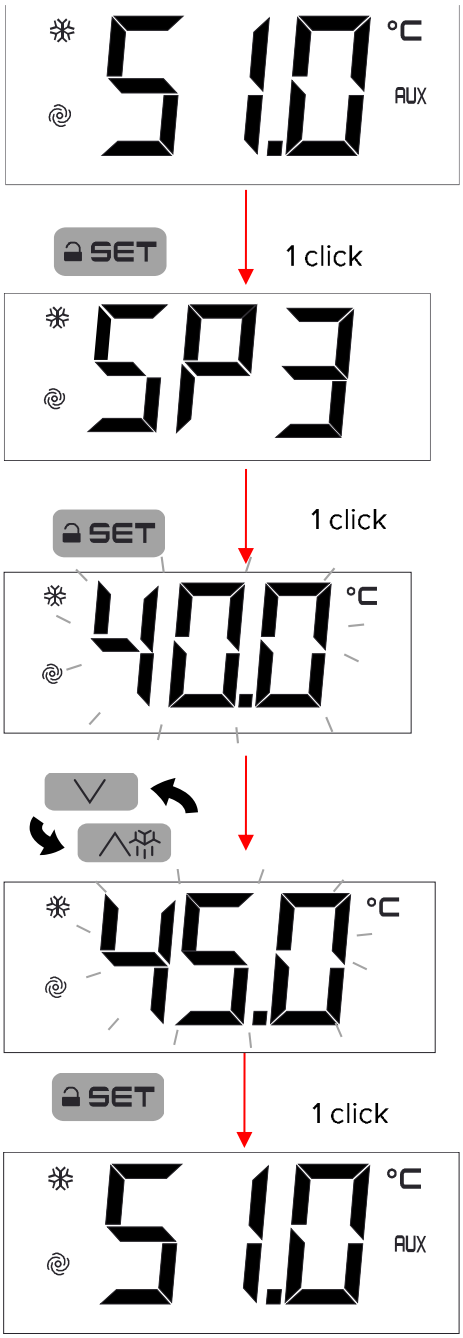

Touch SET and select with ∨ and ∧ SP3. Touch SET to confirm.

The display will show the programmed temperature.

Touch ∨ or ∧ to select the desired temperature.

Touch SET to confirm or ⏻ to cancel.

9.10. Photovoltaic input

Working on this mode, the system automatically heats the water due to electric energy surplus or by Off Peak rate.

The parameters of this mode can only be changed by the Installer's Menu.

Contact with the technician for more information.

The system can be combined with and Photovoltaic Inverter to take advantage of the surplus energy generated by the panels, by forcing the system working and storing this energy in useful hot water.

The system has in the electric boar two terminals to connect a **zero-voltage** contact.

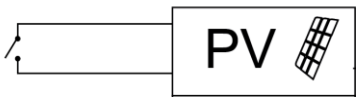

When the contact is closed, the system automatically changes to Photovoltaic mode and the heat pump and electric heater work to achieve the programmed temperature. When the contact is opened, the system returns to the previous mode.

This contact can be also used for Off Peak Rates. To do it, connect into the contact a timer with a **zero-voltage output**.

9.11. Displaying/deleting compressor functioning hours

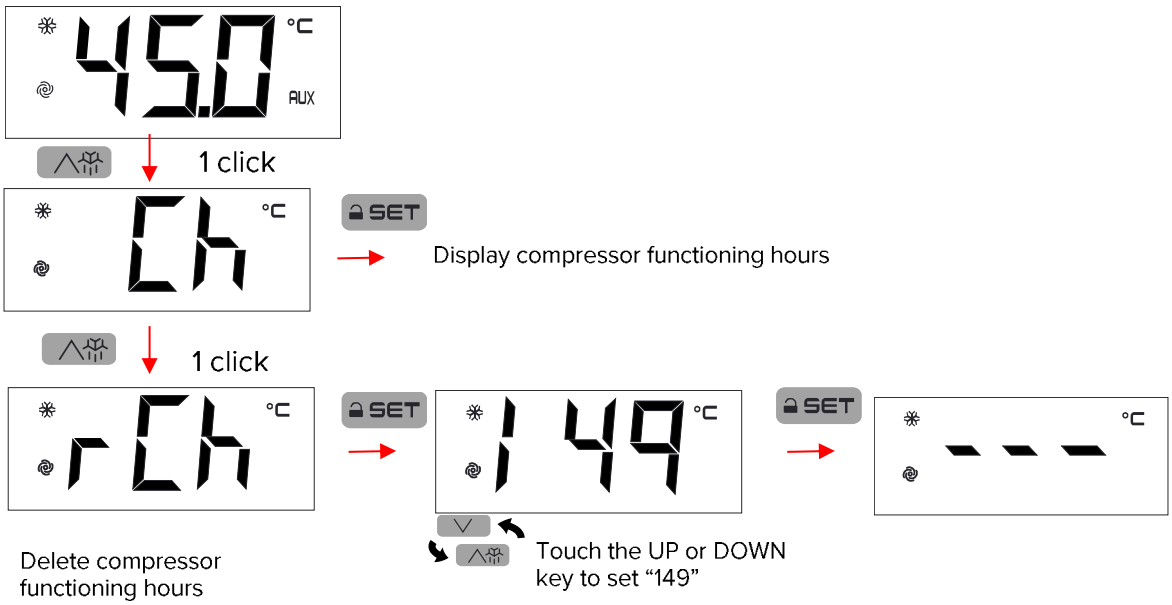

9.12. Antillegionella

The anti-legionnella feature reduces the risk of development of bacteria in the tank.

The system performs a thermal shock disinfection to avoid any risk conditions that might cause the development of bacteria. The disinfection is made automatically once a month, reaching a temperature of 70 °C.

Anti-legionella can be disable or enable in the installer menu.

9.13. Alarms

Alarms	Meaning
Pr1	Water temperature probe alarm. Check the temperature probe integrity and the electrical connection
Pr2	Water temperature probe alarm. Check the temperature probe integrity and the electrical connection
Pr3	Evaporator temperature probe alarm. Check the temperature probe integrity and the electrical connection
AL	Low temperature alarm
AH	High temperature alarm
LHP	Low pressure switch alarm / Device blocked Switch the device off and on
HP	High pressure switch alarm Switch the device off and on
FiL	Compressor maintenance alarm By touching any key, you delete the compressor functioning hours.
UtL	Evaporator failure alarm Switch the device off and on

10. WARRANTY CONDITIONS

Component	Warranty period
Heat exchanger	1 year
Electrical, electronic and mechanical removable components	2 years

The warranty exclusively covers productions faults of the product, excluding any liability for any material damage or injury that results directly or indirectly from the use of this product.
The warranty takes effect from the moment that the system is installed, perfectly justified via the commissioning file correctly completed and sent to the factory within 2 months, or in absence of this justification, the date that shall be take into consideration is the invoice date.
The installer or distributor of the product is the solely responsible for compliance with the installation rules given by the manufacturer.
Failures or incidences due to the following reasons are excluded from the warranty:

- Handling or repair the product by unauthorised personnel.
- Damage caused by impact or fall during handling the product after it leaves the factory.
- To exceed the maximum accumulation temperature. The maximum accumulation temperature in all buffer tanks, unless otherwise indicated by Climer Technology, S.L.L., is 85ºC. The most restrictive operating temperature range of those indicated in this document, data sheet, equipment manual and identification label will always prevail, contrary indication expressed by Climer Technology, S.L.L.
- Damage to the tank, result of malfunction from the overpressure limiting valve. Maximum 3 bars in the secondary, 9 bars in the primary and 9 bars in consumption and failing that indicated in the identification label of the equipment, applying as maximum pressure of each circuit the most restrictive.
- Location of the product at any place subject to high temperature, humidity, inclemency, frost, aggressive environment…
- Fault caused by an erroneous installation, which makes the product work out of its design conditions.
- Faults caused by not having installed the supplied security group or incorrect installation thereof.
- Overvoltage power supply (grid, beam...)
- Faulty electrical connection, insufficient wire section, non-compliance with electrical schemes…
- Use water within any of the following criteria:
    - Calcium carbonate ($CaCO_3$) content > 200 mg/L
    - Soluble salts content higher than 500 mg/L
    - Alkalinity greater than 150 mg/L (ppm)
    - pH of water lower than 6 or higher than 9, measured at 20ºC.
    - Chloride content > 500 mg/L
- Fault due to galvanic corrosion result from direct connection of copper pipes without electrolytic sleeve
- Installation of the product in a manner not in accordance with the operating instructions
- Damages result from problems that could not be detectable due to the location of the system (hardly accessible place) and that could have been avoided by a prompt reparation of the product.
- Switch on the heating system without filling the tank (dry heating).
- Any modification of the product without prior agreement with the manufacturer or use spare parts non-authorized or non-supplied by the manufacturer.

Based on these considerations, the warranty comprises in replacing the faulty component to the Installer or Distributor. Transport cost, labour or any compensation are excluded from the warranty.
The fault in single components never comprises the replacing of the product. The installer or distributor is responsible of the changing or reparation of the defective part.
The warranty of the replaced spare part has the same vigour as the product, shall not entail hence the warranty period to be extended or a new warranty period to commence.

CLIMER TECHNOLOGY S.L.L.

This company reserves the right to modify the information contained herein without prior notice.